PIC100-MZ V2 Card (for OpenPIC Pro V2 Motherboard) Schematic

Hardware Revision v2

If you are experiencing some problems with any of our products or just need additional information,please contact our technical support:wxl07297662156@163.com

If you want to learn more about our product,please visit our website:

www.LogiFind.com

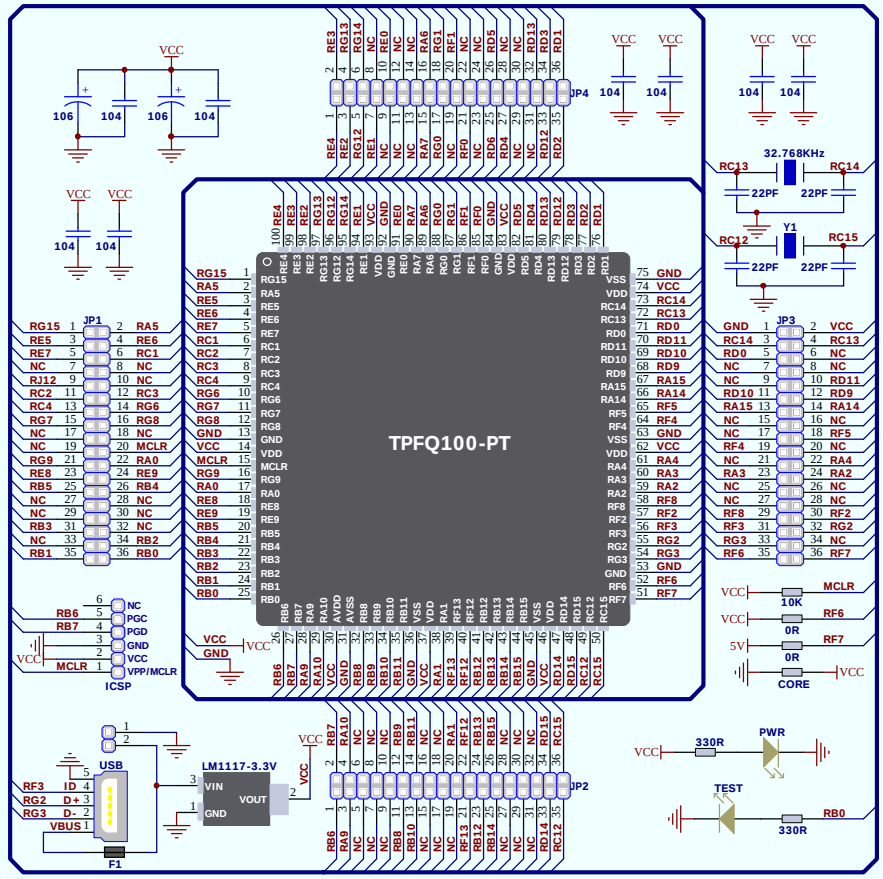

Title			
Size A3	Number		Revision
Date: 6-Aug-2020		Sheet of	
File: E:\LogiFind_Design.Ddb		Drawn By:	